# HANSA Sight glass w indicator solder 28 mm FI 2402428250




HANSA 2402428050
HANSA 2402428250

## Product short description:

Sight glass w indicator solder 28 mm
-40°C bis +100°C Operating temperature
60 bar operating pressure
Dimension (LxWxH): 175xx mm
Weight: 0,243 kg
Part-No.: 2402428050

Made in Germany

## Product codes:

Reference: 2402428250
EAN13: 4251692921562

## Product description:

Housing material: Brass (according to DIN EN 12164)

Connection pipe material: Copper CW024A (Cu-DHP)
Operating pressure up to 60 bar

Temperature range: -40°C to +100°C

Approved refrigerants:
HFC / PFC / CFC / KW / R744 / R290 Propane / R1270 Propene
except refrigerants containing NH3.

Large viewing area on all versions, with and without indicator. High temperature and pressure resistance.

## Product features:

Material design: Brass
Connection type: Solder ODF

Hansa Kältetechnik GmbH
Langenwiedenweg 111
D-59457 Werl / Deutschland
Telefon: +49 2922 86665-0
Fax: +49 2922 86665-284
E-Mail: info@hansakaelte.de

© 2024 HANSA Kältetechnik GmbH

Connection: 28 mm
Authorised refrigerants: R290
Authorised refrigerants: R1270

**Product attributes:**

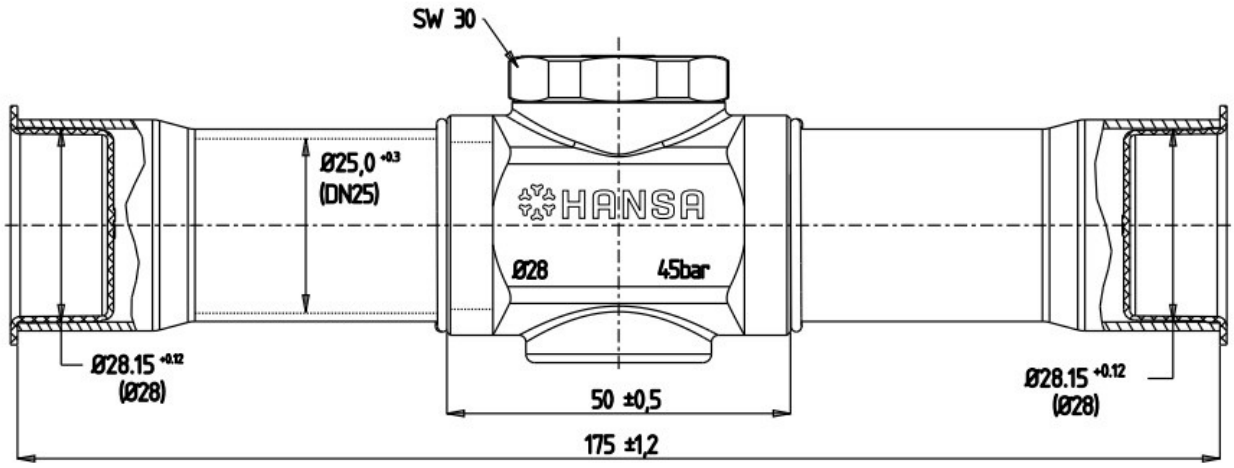


HANSA 2402428050

Hansa Kältetechnik GmbH
Langenwiedenweg 111
D-59457 Werl / Deutschland
Telefon: +49 2922 86665-0
Fax: +49 2922 86665-284
E-Mail: info@hansakaelte.de

© 2024 HANSA Kältetechnik GmbH