HANSA Safety valve KSV 17.0 bar | 12.5 mm | G1/2'' for propane R290_2442170050PRO



Product short description:

Safety valve KSV 17.0 bar | 12.5 mm | G1/2'' for propane R290

Dimension (LxWxH): 48x41x131 mm
Weight: 0,49 kg
Part-No.: 2442170050PRO

Made in Germany

Product codes:

Reference: 2442170050PRO
EAN13: 4251692911754

Product description:

Design type	direct acting spring loaded valves
Opening characteristic	Standard safety valve
Type designation	KSV and HD-KSV
Part number KSV	2442xxx050 (xxx = bar value e.g. 280 = 28,0 bar)
Part number HD-KSV	2443xxx050 (xxx = bar value e.g. 280 = 28,0 bar)
Valve size	DN 15
threat	G 1/2"
outlet	G 1''
overall length	131 mm
	27
Weight pc	0,490 kg
Licensing	Type tested safety valve (Modul B)

Hansa Kältetechnik GmbH
Langenwiedenweg 111
D-59457 Werl / Deutschland
Telefon: +49 2922 86665-0
Fax: +49 2922 86665-284
E-Mail: info@hansakaelte.de

© 2024 HANSA Kältetechnik GmbH

	Individual approval is based on Module F (2014/68 EU) Z-D-002-11018/16 and Z-D-002-11020/16
Marking KSV	SV · 16-11018 · 123 · D/G · 0,51 · p
Marking HD-KSV	SV · 16-11020 · 123 · D/G · 0,51 · P
Conformity assessment	Category IV - Modul B+F (2014/68 EU)
Applied standards and technical specification	DIN EN 378, AD 2000-Information Sheet, VdTÜV-Information Sheet, DIN EN ISO 4126-1, Guideline 2014/68 EU
Suitable for	Fluids in group 1 (please consult manufacturer) and 2 for all common refrigerants like HFC and CFC Includes refrigeration fluids safety class A2L "PRO" version for R290 Propan available. Except NH3 refrigerant !
Permissible temperature range	-30°C bis 120°C
Nominal Opening Pressure	as per catalogue ± 3% (EN ISO 4126-1 7.2.1)
Opening Pressure Diff	≤ 10%, min. 0,1bar
	EN ISO 4126–1 Travel ° ≤ 0,26
Threaded connection	G 1/2"
Max flow diameter	12,5mm
Housing material	brass CW617N (2.402 or CuZn40Pb2)
Output	G 1" free blow-off
Reduced discharge coefficient	0.51
Remarks:	Each valve tested and controled under supervision of DEKRA

Hansa Kältetechnik GmbH
Langenwiedenweg 111
D-59457 Werl / Deutschland
Telefon: +49 2922 86665-0
Fax: +49 2922 86665-284
E-Mail: info@hansakaelte.de

© 2024 HANSA Kältetechnik GmbH

quality control
certificate with control number
attached to each valve

Product features:

Authorised refrigerants: R401B
Authorised refrigerants: R449A
Authorised refrigerants: R409A
Authorised refrigerants: R471A
Authorised refrigerants: R422D
Authorised refrigerants: R401C
Authorised refrigerants: R450A
Authorised refrigerants: R409B
Authorised refrigerants: R513B
Authorised refrigerants: R422E
Authorised refrigerants: R401A
Authorised refrigerants: R452B
Authorised refrigerants: R410A
Authorised refrigerants: R513A
Authorised refrigerants: R423A
Authorised refrigerants: R402A
Authorised refrigerants: R452C
Authorised refrigerants: R410B
Authorised refrigerants: R514A
Authorised refrigerants: R424A
Authorised refrigerants: R402B
Authorised refrigerants: R452A
Authorised refrigerants: R414A
Authorised refrigerants: R515A
Authorised refrigerants: R425A
Authorised refrigerants: R403A
Authorised refrigerants: R453A
Authorised refrigerants: R414B
Authorised refrigerants: R744
Authorised refrigerants: R426A
Authorised refrigerants: R407H
Authorised refrigerants: R456A
Authorised refrigerants: R416A
Authorised refrigerants: R1233zd(E)
Authorised refrigerants: R427A

Hansa Kältetechnik GmbH
Langenwiedenweg 111
D-59457 Werl / Deutschland
Telefon: +49 2922 86665-0
Fax: +49 2922 86665-284
E-Mail: info@hansakaelte.de

© 2024 HANSA Kältetechnik GmbH

Authorised refrigerants: R407I
Authorised refrigerants: R458A
Authorised refrigerants: R417A
Authorised refrigerants: R1234ze(E)
Authorised refrigerants: R427B
Authorised refrigerants: R407A
Authorised refrigerants: R460A
Authorised refrigerants: R417B
Authorised refrigerants: R1336mzz(E)
Authorised refrigerants: R428A
Authorised refrigerants: R434A
Authorised refrigerants: R407B
Authorised refrigerants: R460B
Authorised refrigerants: R417C
Authorised refrigerants: R1336mzz(Z)
Authorised refrigerants: R437A
Authorised refrigerants: R407C
Authorised refrigerants: R460C
Authorised refrigerants: R420A
Authorised refrigerants: R455A
Authorised refrigerants: R134a
Authorised refrigerants: R438A
Authorised refrigerants: R407D
Authorised refrigerants: R461A
Authorised refrigerants: R421A
Authorised refrigerants: R454C
Authorised refrigerants: R22
Authorised refrigerants: R442A
Authorised refrigerants: R407E
Authorised refrigerants: R463A
Authorised refrigerants: R421B
Authorised refrigerants: R290
Authorised refrigerants: R30
Authorised refrigerants: R448A
Authorised refrigerants: R407F
Authorised refrigerants: R464A
Authorised refrigerants: R422A
Authorised refrigerants: R600A
Authorised refrigerants: R123
Authorised refrigerants: R449B
Authorised refrigerants: R407G
Authorised refrigerants: R466A
Authorised refrigerants: R422B

Hansa Kältetechnik GmbH
Langenwiedenweg 111
D-59457 Werl / Deutschland
Telefon: +49 2922 86665-0
Fax: +49 2922 86665-284
E-Mail: info@hansakaelte.de

© 2024 HANSA Kältetechnik GmbH

Authorised refrigerants: R124
Authorised refrigerants: R245fa
Authorised refrigerants: R449C
Authorised refrigerants: R408A
Authorised refrigerants: R468A
Authorised refrigerants: R422C

Product attributes:

Hansa Kältetechnik GmbH
Langenwiedenweg 111
D-59457 Werl / Deutschland
Telefon: +49 2922 86665-0
Fax: +49 2922 86665-284
E-Mail: info@hansakaelte.de

© 2024 HANSA Kältetechnik GmbH

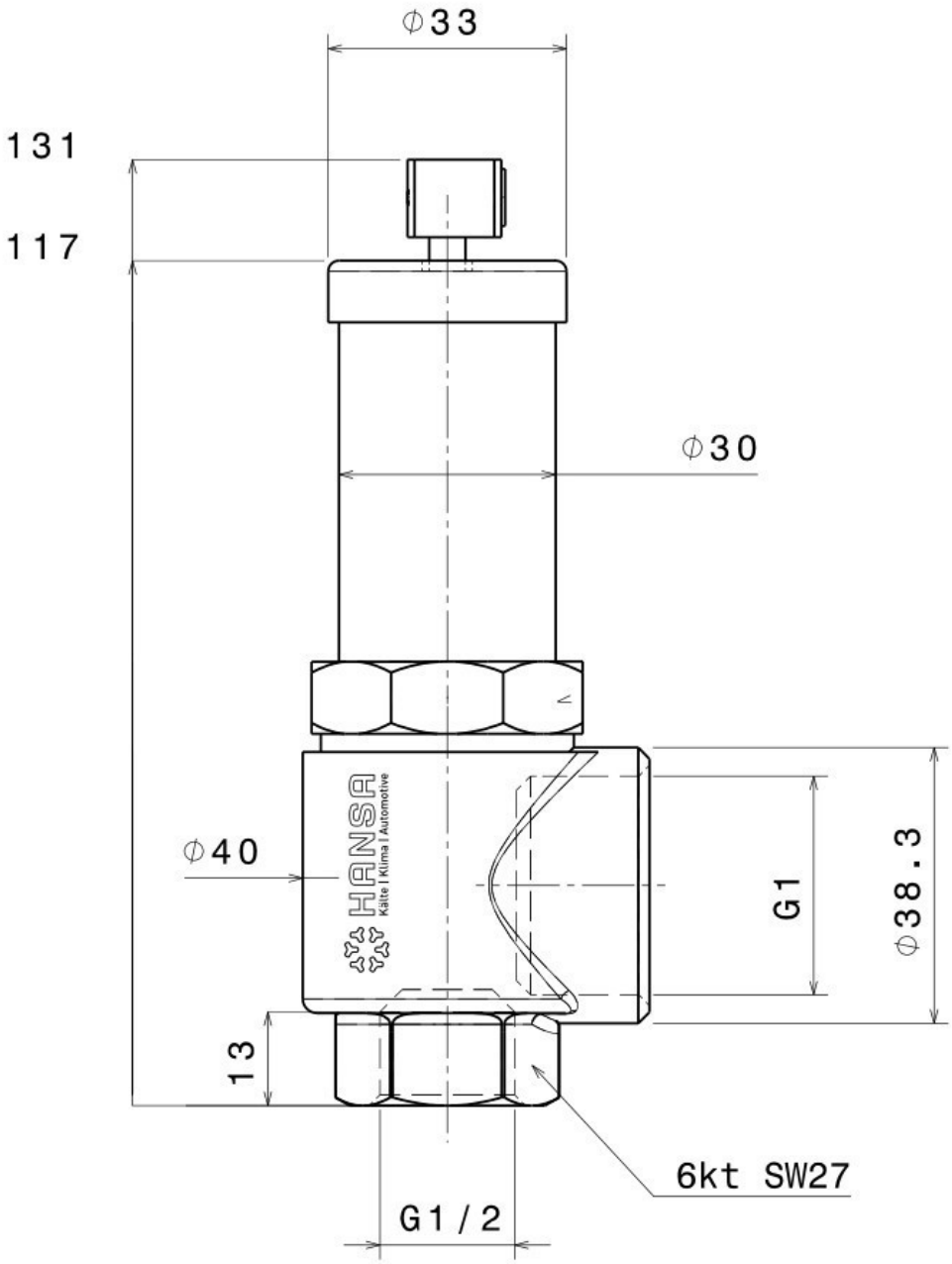

Hansa Kältetechnik GmbH
Langenwiedenweg 111
D-59457 Werl / Deutschland
Telefon: +49 2922 86665-0
Fax: +49 2922 86665-284
E-Mail: info@hansakaelte.de

© 2024 HANSA Kältetechnik GmbH